USER'S MANUAL FOR REVERSE PARKING ASSISTANCE SYSTEM

The System consists of 4 sensors mounted in the rear bumper, a controller, a buzzer and a wiring harness. The system is activated when the ignition is turned on and reverse gear is engaged. The system measures the distance to the closest obstacle and then the buzzer will emit a corresponding audible warning beep.

Function

1. Step up sound frequency: closer and faster
2. Adjustable volume

Specification

1. Operation voltage: DC9~16V
2. Operation Temp: -20~+70℃
3. Consumption: ≤4W
4. Detection range: 0.3m~2.0m

Wiring diagram

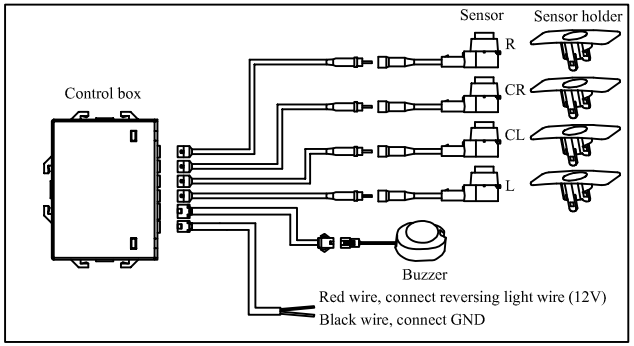

Alarm mode

Distance	Alarm
2.0m~	no sound
1.5m~2.0m	BI----BI----BI
1.4m~1.0m	
0.9m~0.6m	BI–BI–BI closer and faster
0.5m~0.3m	BIBIBI
0.3m~	constant sound

Detection area

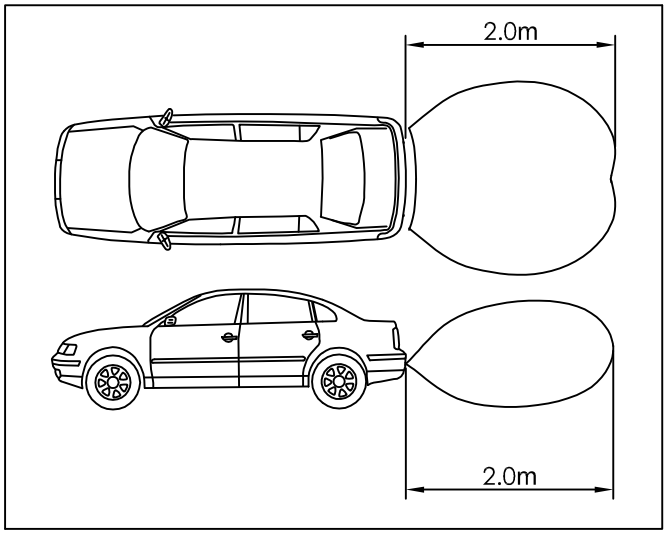

Pay attention to assembling

1. This product can only be used on 12V automobile;
2. There are "L、CL、CR、R" labels on wire of each sensor,Please plug the corresponding connector into the control box;
3. Please make sure that the wiring harness is fixed and far away from vent-pipe.
4. Sensor's installation position:

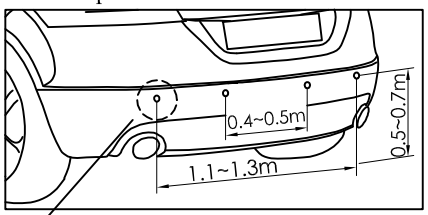

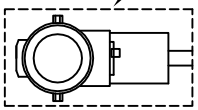

a.The sensor connector should face horizontal.
b.Please clean the bumper before stick the holder. Then fix the holder by silicone sealant after stick on the bumper.

Setup function

ECU setup switch

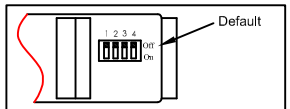

1	N/A
2	N/A
3	Spare tire function on&off
4	Low sensitivity function on&off

Buzzer volume setup switch

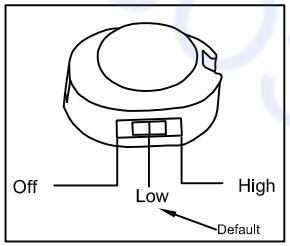

Function test & Trouble shooting

1.If system give you fault warning, maybe ground is detected. Please check if the sensor connector faces horizontal and the installation position is too closer to ground.
2. Please adjust the slide switch on the buzzer to change the volume. If the sound is abnormal, please check if there is obstacle on the hole and the voltage supply.

Notices

1. Because of automobile inertia and other facts in practical situation, please reverse automobile <5km/hr; when the display show distance ≤0.5m, please stop the automobile;
2. Please clean the ice and mud if there's any on the surface of the sensor.
3. When running on large angle slope, grass land or gravel road , it is easy to give out fault warning;
4. Attention please that it is not easy to detect obstacle in situations as follow:

4.1 soft object like cotton and sponge

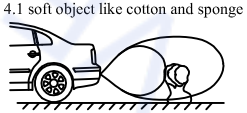

4.2 smooth sphericity

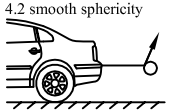

4.3 sharp object

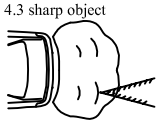

5. Please drive carefully in situation as follow:

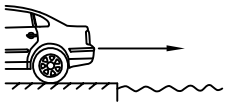

6. Parking assistance system is only used as an auxiliary equipment, driver needs to take responsibility of driving safety by himself.